REVISIONS				
ZONE	REV	DESCRIPTION	DATE	APVD
	-	PRODUCTION RELEASE PER ECO 476853		

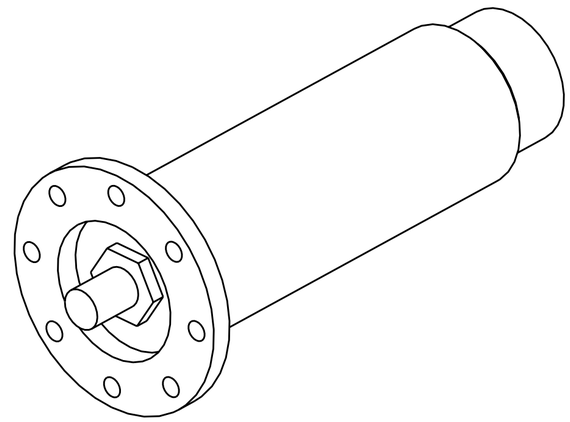

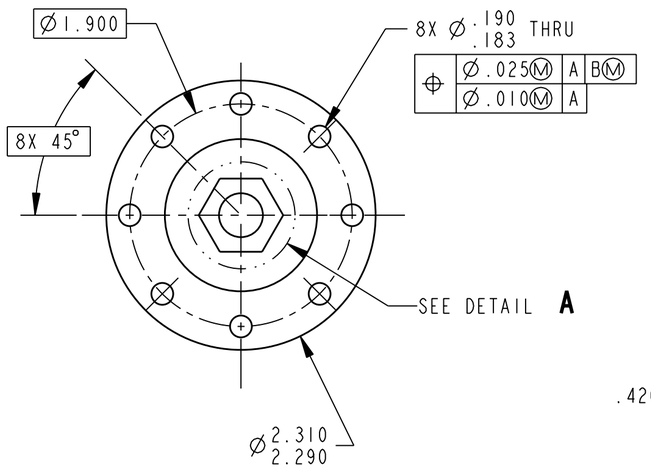

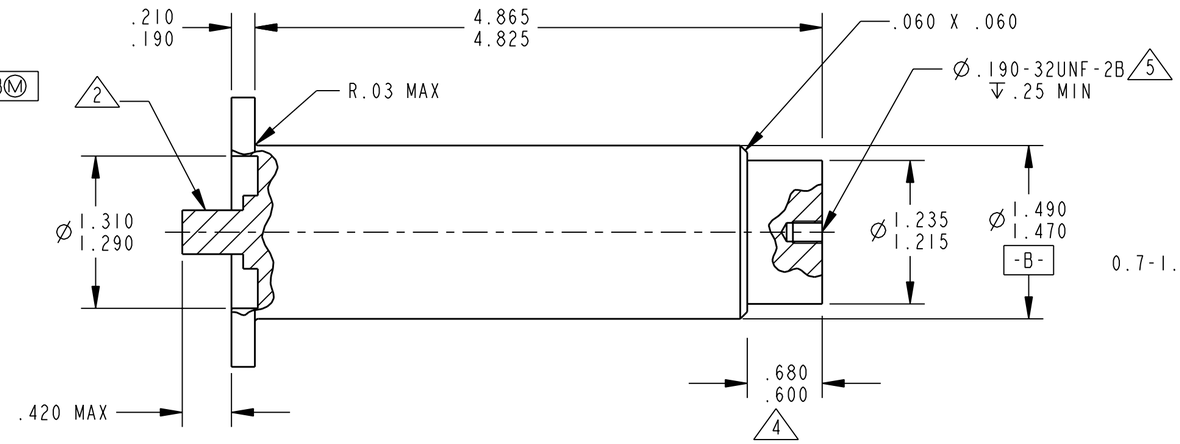

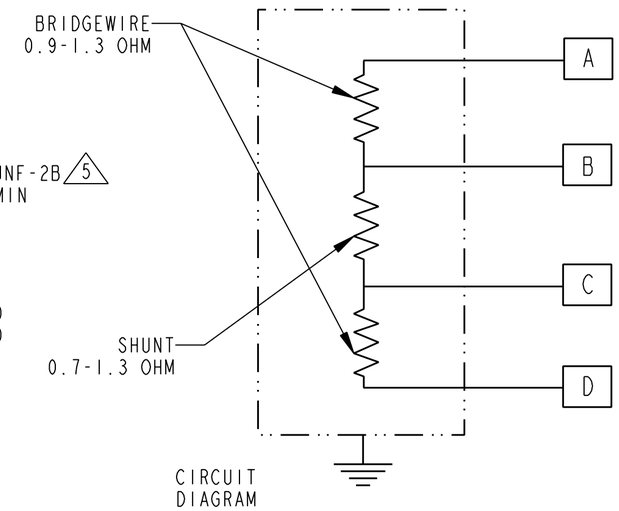

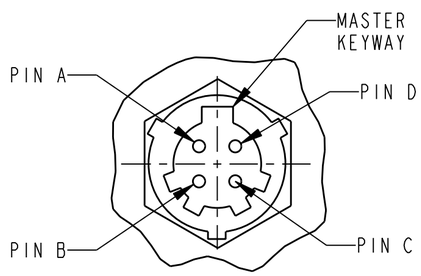

DETAIL **A**
SCALE NONE

INTERFACE CONTROL DRAWING

5 THREAD PER FED-STD-H28.

4 THE GAS OUTPUT PORTS ARE LOCATED ON THE NOTED SURFACE.

3. (REMOVED)

2 THE INITIATOR, SSSI PART NUMBER 108597-1, IS QUALIFIED IN ACCORDANCE WITH MIL-I-23659. THE CONNECTOR MATES WITH AN MS3116E-8-4S CONNECTOR (OR EQUIV).THE RF SHIELDING CAP SHALL REMAIN INSTALLED DURING ALL SHIPPING AND HANDLING.

1. GAS GENERATOR, SSSI PART NUMBER 107807-1, IS IN COMPLIANCE WITH PRODUCT SPECIFICATION 107840.

NOTES:

-6	-5	-4	-3	-2	-1	PART NUMBER	ITEM NO	NOMENCLATURE	MATERIAL AND SPECIFICATION
					1		1		

QTY REQD — PARTS LIST

STANDARD NOTES
UNLESS OTHERWISE SPECIFIED
(CHECK BOX AS APPLICABLE)

- [ ] SURFACE FINISH 125 RMS, TEXTURE PER ANSI B 46.1
- [X] REMOVE ALL BURRS AND BREAK SHARP EDGES .005-.015
- [ ] FILLET RADII .015-.030
- [X] DIA'S ON COMMON CENTERLINE (RUNOUT .005 MAX)
- [ ] THREAD PER MIL-S-8879
- [ ] DIMENSIONS ARE AFTER CHEMICAL COATING/PLATING BUT PRIOR TO ANY PRIME OR PAINT
- [ ] ALTERNATE MATERIAL LIST 103712 NOT APPLICABLE
- [ ] TORQUE FASTENERS PER SPS 129 UNLESS TORQUE IS SPECIFICALLY SHOWN IN ⬡ IN-LB
- [X] DIMENSIONS ARE IN INCHES
  TOLERANCES
  DECIMALS .XXX ± .010
  .XX ± .03
  .X ± .1
  ANGLES ± 1°

DFTG	D.MARCUS	98-4-1
CHKR	J. ROSE	00-11-06
DSGN	B. NOVAK	00-11-09
MFG	B. PORTER	00-11-10
PROJ	K. VONDERAHE	00-11-07
QA	M. CORNELIUS	00-11-08
MGR	S. SMITH	00-11-09
STRESS	N/A	
ILS	G. SPRAGUE	00-11-09
REL	S. NORMAN	00-11-10

Simula
Safety Systems, Inc.
Tempe, Arizona

TITLE
ICD, GAS GENERATOR

CAGE CODE	SIZE	DWG NO	REV
54786	C	107881	-

SCALE 1/1 | WT - | SHT 1 OF 1

CABS		-	-
PROGRAM		NEXT ASSY	TOP ASSY

PRO-E DATA FILE

CONTRACT NUMBER