REVISIONS				
ZONE	REV	DESCRIPTION	DATE	APVD
	-	PRODUCTION RELEASE PER ECO 477688	01-03-19	KR
	A	REVISED PER ECO 478498	01-05-18	AS

INVALID FOR MANUFACTURE WITHOUT CM APPROVAL IN LAST BLOCK

**THIS DOCUMENT IS A SIMULA CONTROLLED DOCUMENT.
IT HAS BEEN PASSWORD PROTECTED AND CANNOT BE EDITED.
IF YOU PRINT A HARD COPY OF THIS DOCUMENT,
IT WILL BE AN "UNCONTROLLED COPY".**

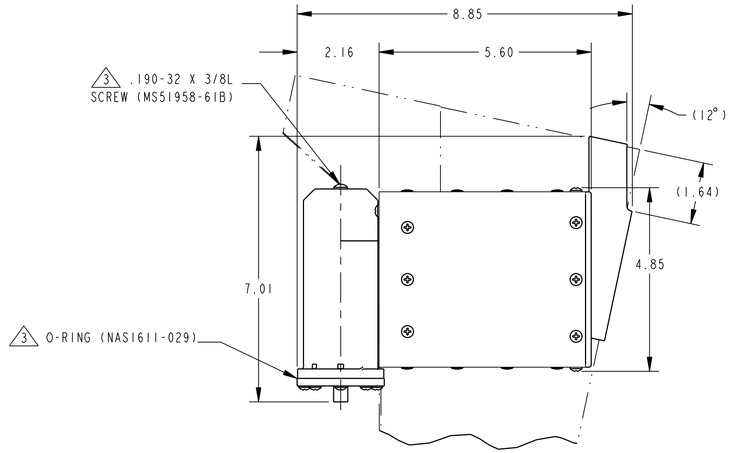

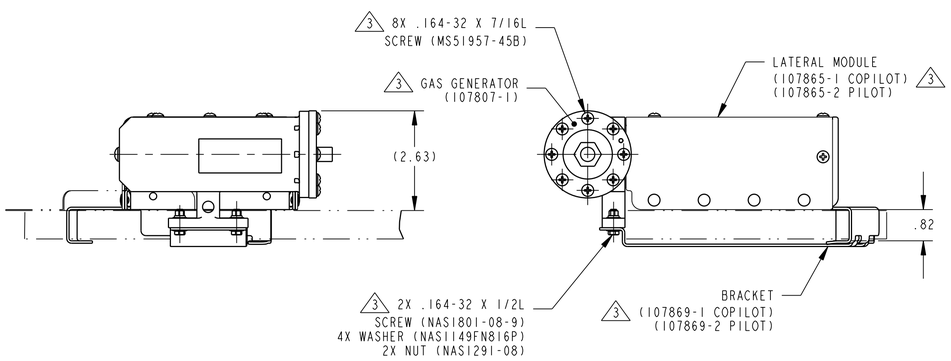

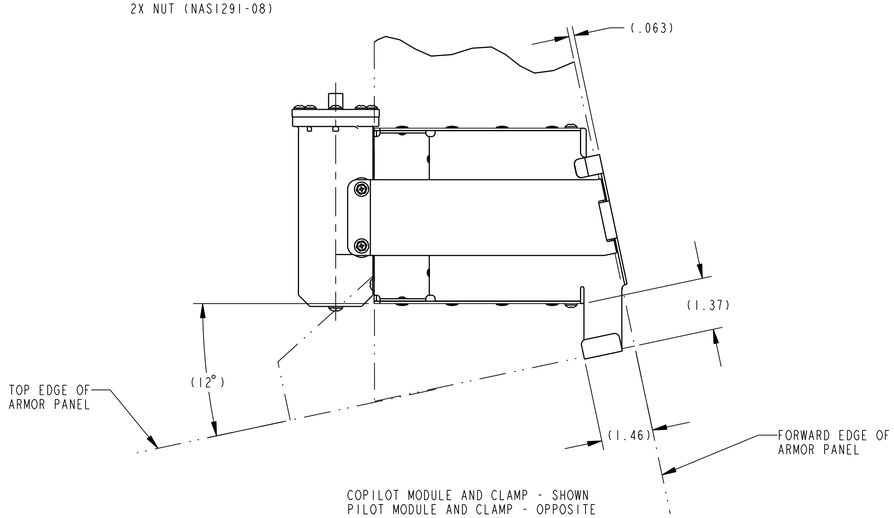

COPILOT MODULE AND CLAMP - SHOWN
PILOT MODULE AND CLAMP - OPPOSITE

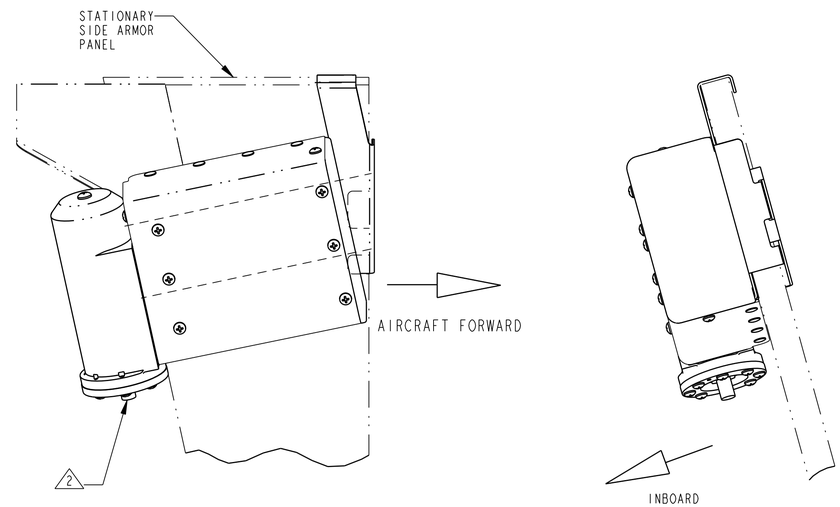

INTERFACE CONTROL DRAWING

3 COMPONENTS FROM B-KIT, SSSI DRAWING NO 107802.

2 THE ELECTRICAL CONNECTOR MATES WITH AN MS3116-8-4S CONNECTOR (OR EQUIV).

1. THIS ICD SHOWS GENERAL ARRANGEMENT AND INTERFACE REQUIREMENTS OF THE LATERAL AIR BAG SYSTEM FOR THE SIKORSKY UH-60 BLACK HAWK AIRCRAFT.

NOTES:

-6	-5	-4	-3	-2	-1	PART NUMBER	ITEM NO	NOMENCLATURE	MATERIAL AND SPECIFICATION
QTY REQD								PARTS LIST	

STANDARD NOTES
UNLESS OTHERWISE SPECIFIED
(CHECK BLOCK AS APPLICABLE)

- ☐ DIMENSIONS AND TOLERANCES PER ASME Y14.5M - 1994
- ☐ SURFACE FINISH 125 RMS, TEXTURE PER ANSI B 46.1
- ☐ REMOVE ALL BURRS AND BREAK SHARP EDGES .005-.015
- ☐ DIA'S ON COMMON CENTERLINE (RUNOUT .005 MAX)
- ☐ DIMENSIONS ARE AFTER CHEMICAL COATING/PLATING BUT PRIOR TO ANY PRIME OR PAINT
- ☐ ALTERNATE MATERIAL LIST 103712 NOT APPLICABLE
- ☐ TORQUE FASTENERS PER SPS 129 UNLESS TORQUE IS SPECIFICALLY SHOWN IN ⬡ IN LB
- ☐ THREADS PER FED-STD-H28
- ☐ FILLET RADII .015-.030
- ☐ DIMENSIONS ARE IN INCHES

TOLERANCES
DECIMALS .XXX ±.010
.XX ±.03
.X ±.1
ANGLES ±1°

THIRD ANGLE PROJECTION

PRO-E DATA FILE

DFTG	D.MARCUS	00-02-17
CHKR	J.ROSE	01-03-06
DSGN	B.NOVAK	01-03-07
MFG	B.PORTER	01-03-07
PROJ	K.VON DER AHE	01-03-12
QA	M.CORNELIUS	01-03-19
MGR	S.SMITH	01-03-12
STRESS	NA	
ILS	J.DOHERTY	01-03-19
REL	K.RODRIGUEZ	01-03-19

CONTRACT NUMBER

Simula
Safety Systems, Inc.
Applied Technologies Division
Tempe, AZ

TITLE
ICD, UH-60 CABS
LATERAL AIR BAG SYSTEM

CAGE CODE	SIZE	DWG NO	REV
54786	D	107866	A
		SCALE 1/2	WT -	SHT 1 OF 1

UH-60 CABS	-	-
PROGRAM	NEXT ASSY	TOP ASSY