REVISIONS			
REV	DESCRIPTION	DATE	APVD
-	PRODUCTION RELEASE PER ECO 477474		

INVALID FOR MANUFACTURE WITHOUT CM APPROVAL IN LAST BLOCK

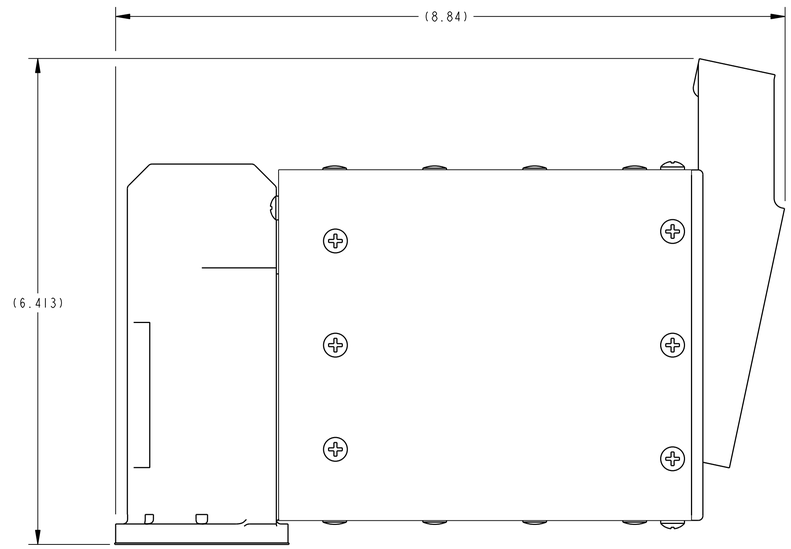

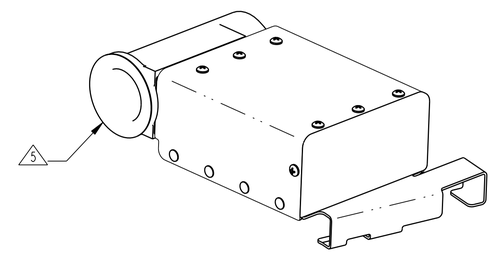

-1 CONFIGURATION - SHOWN

SCALE 1/2

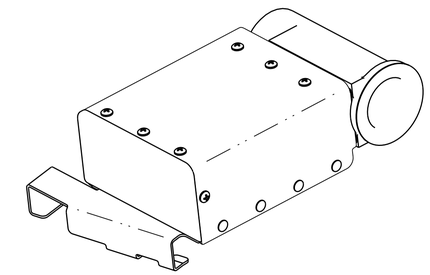

-2 CONFIGURATION - OPPOSITE

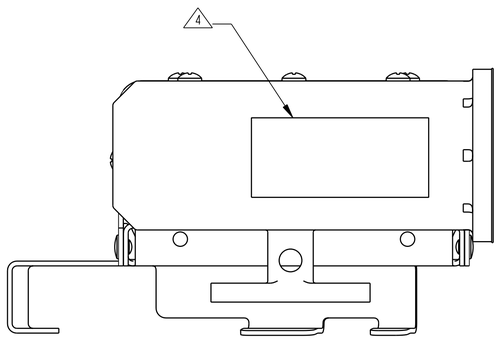

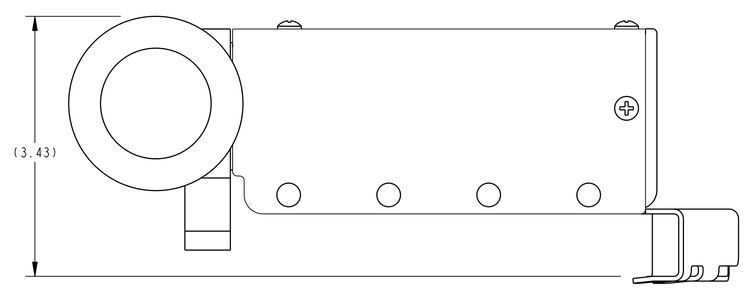

APPROVED SOURCE OF SUPPLY			
DASH NO	VENDOR		
	PART NO	ADDRESS	CAGE CODE
-1	107860-1	SIMULA SAFETY SYSTEMS, INC 7414 S. HARL AVE. TEMPE, AZ 85283-4307 602/893-7533	54786
-2	107860-2		

SOURCE CONTROL DRAWING

ONLY THE ITEM DESCRIBED ON THIS DRAWING WHEN PROCURED FROM THE VENDOR(S) LISTED HEREON IS APPROVED BY SIMULA SAFETY SYSTEMS FOR USE IN THE APPLICATION SPECIFIED HEREON. A SUBSTITUTE ITEM SHALL NOT BE USED WITHOUT PRIOR APPROVAL BY SIMULA SAFETY SYSTEMS.

IDENTIFICATION OF THE APPROVED SOURCE(S) OF SUPPLY LISTED HEREON IS NOT TO BE CONSTRUED AS A GUARANTEE OF PRESENT OR CONTINUED AVAILABILITY AS A SOURCE OF SUPPLY FOR THE ITEM(S).

5 PLUG INSTALLED FOR SHIPPING AND HANDLING ONLY.

4 IDENTIFY PER MIL-STD-130, SERIALIZATION REQUIRED.

3. SEE INTERFACE CONTROL DRAWING 107866 FOR MECHANICAL INTERFACE.
2. SEE INTERFACE CONTROL DRAWING 107955 FOR ELECTRICAL INTERFACE.
1. THE LATERAL AIR BAG MODULE ASSEMBLY SHALL COMPLY WITH US ARMY AIRCREW INTERGRATED SYSTEMS (ACIS) PERFORMANCE SPECIFICATION AVNS-PRF-10085.

NOTES:

-6	-5	-4	-3	-2	-1	PART NUMBER	ITEM NO	NOMENCLATURE	MATERIAL AND SPECIFICATION
				1	-		2		
				-	1		1		

QTY REQD — PARTS LIST

STANDARD NOTES
UNLESS OTHERWISE SPECIFIED
(CHECK BLOCK AS APPLICABLE)

- [ ] DIMENSIONS AND TOLERANCES PER ASME Y14.5M - 1994
- [ ] SURFACE FINISH 125 RMS, TEXTURE PER ANSI B 46.1
- [ ] REMOVE ALL BURRS AND BREAK SHARP EDGES .005-.015
- [ ] DIA'S ON COMMON CENTERLINE (RUNOUT .005 MAX)
- [ ] DIMENSIONS ARE AFTER CHEMICAL COATING/PLATING BUT PRIOR TO ANY PRIME OR PAINT
- [ ] ALTERNATE MATERIAL LIST 103712 NOT APPLICABLE
- [ ] TORQUE FASTENERS PER SPS 129 UNLESS TORQUE IS SPECIFICALLY SHOWN IN ⬡ IN LB
- [ ] THREADS PER FED-STD-H28
- [ ] FILLET RADII .015-.030
- [ ] DIMENSIONS ARE IN INCHES TOLERANCES DECIMALS .XXX ± .010, .XX ± .03, .X ± .1, ANGLES ± 1°

THIRD ANGLE PROJECTION

PRO-E DATA FILE

DFTG	D.MARCUS	00-02-18
CHKR	J. ROSE	01-02-14
DSGN	B. NOVAK	01-02-12
MFG	B. PORTER	01-02-15
PROJ	K. VONDERAHE	01-02-14
QA	M. CORNELIUS	01-02-12
MGR	S. SMITH	01-02-20
STRESS	N/A	
ILS	L. MANEY	01-02-14
REL	J. CELIS	01-02-21

CONTRACT NUMBER

Simula
Safety Systems, Inc.
Applied Technologies Division
Tempe, AZ

TITLE
LATERAL AIR BAG MODULE ASSEMBLY

CAGE CODE	SIZE	DWG NO	REV
54786	D	107865	-
SCALE 1/1		WT -	SHT 1 OF 1

PROGRAM		NEXT ASSY	TOP ASSY
UH-60 CABS	-2 -1	107802	107801