REVISIONS				
ZONE	REV	DESCRIPTION	DATE	APVD
	-	PRODUCTION RELEASE PER ECO 477691		

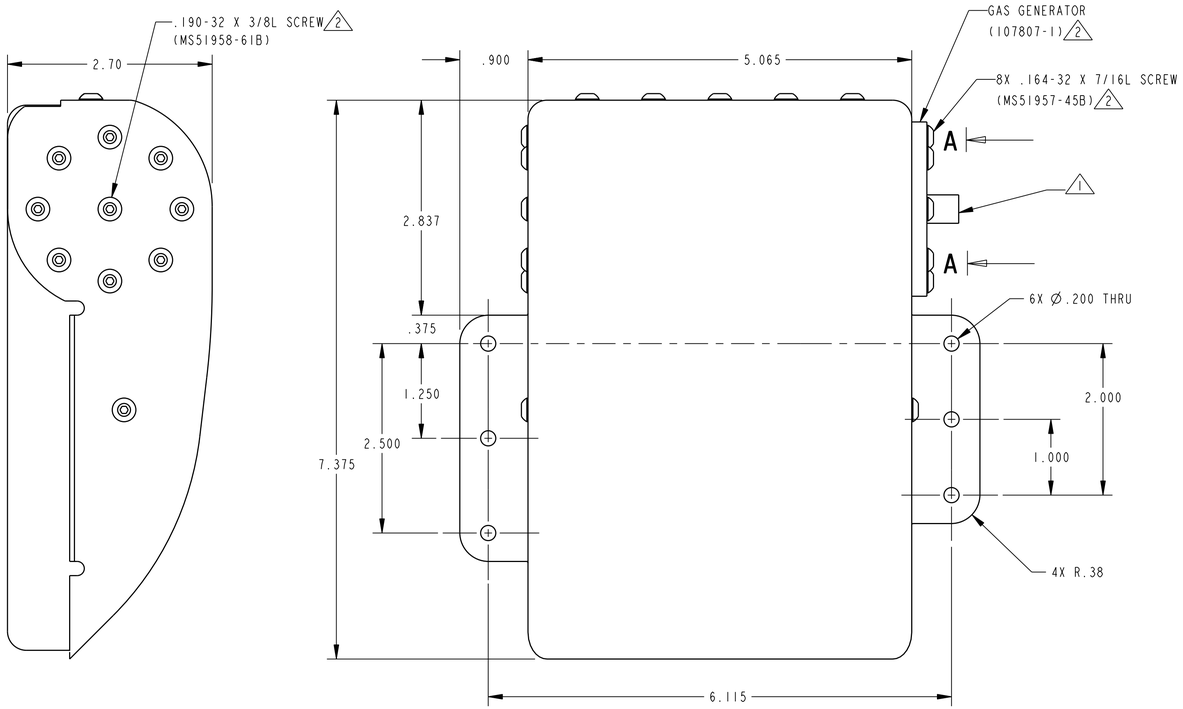

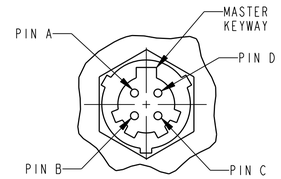

DETAIL **A-A**
SCALE NONE

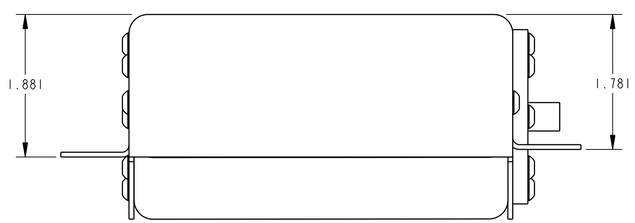

107810-3 COPILOT MODULE - SHOWN
107810-4 PILOT MODULE - OPPOSITE

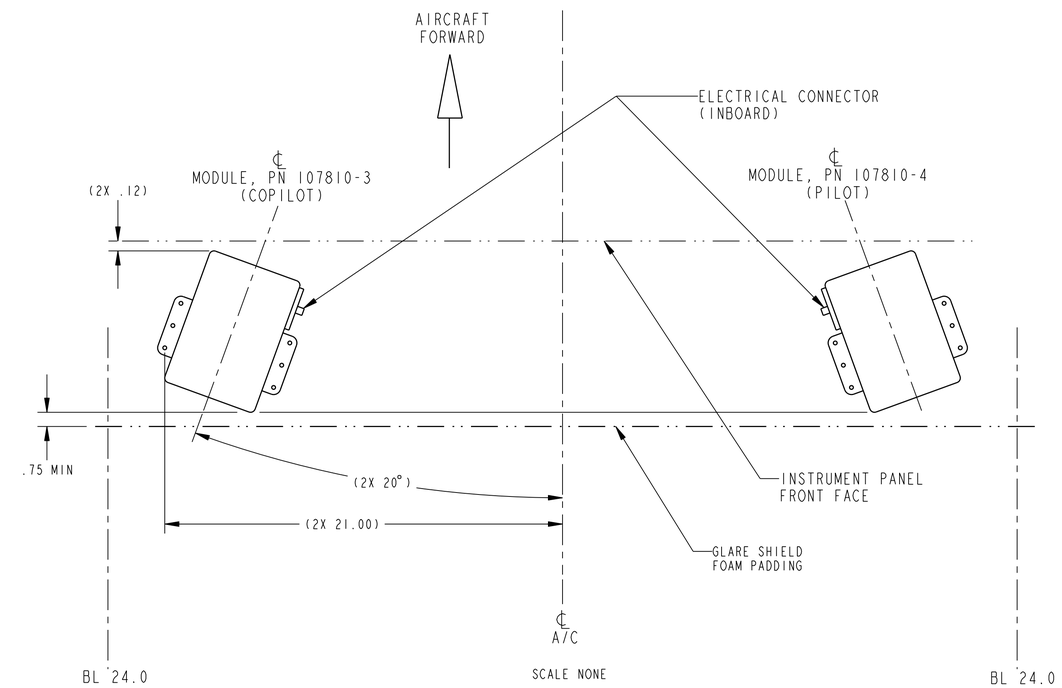

SCALE NONE

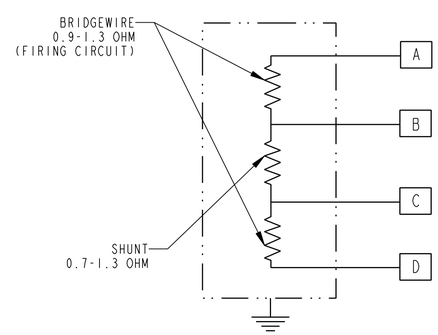

CIRCUIT
DIAGRAM

INTERFACE CONTROL DRAWING

2 COMPONENTS FROM B-KIT, SSSI DRAWING NO 107802.

1 THE ELECTRICAL CONNECTOR MATES WITH AN MS3116E-8-4S CONNECTOR (OR EQUIV). THE RF SHIELDING CAP SHALL REMAIN INSTALLED DURING ALL SHIPPING AND HANDLING.

NOTES:

-6	-5	-4	-3	-2	-1	PART NUMBER	ITEM NO	NOMENCLATURE	MATERIAL AND SPECIFICATION
QTY REQD						PARTS LIST			

STANDARD NOTES
UNLESS OTHERWISE SPECIFIED
(CHECK BLOCK AS APPLICABLE)

- ☐ SURFACE FINISH 125 RMS, TEXTURE PER ANSI B 46.1
- ☐ REMOVE ALL BURRS AND BREAK SHARP EDGES .005-.015
- ☐ FILLET RADII .015-.030
- ☐ DIA'S ON COMMON CENTERLINE (RUNOUT .005 MAX)
- ☐ THREAD PER MIL-S-8879
- ☐ DIMENSIONS ARE AFTER CHEMICAL COATING/PLATING BUT PRIOR TO ANY PRIME OR PAINT
- ☐ ALTERNATE MATERIAL LIST 103712 NOT APPLICABLE
- ☐ TORQUE FASTENERS PER SPS 129 UNLESS TORQUE IS SPECIFICALLY SHOWN IN ⬡ IN-LB
- ☐ DIMENSIONS ARE IN INCHES
  TOLERANCES
  DECIMALS .XXX ± .010
  .XX ± .03
  .X ± .1
  ANGLES ± 1°

DFTG	D.MARCUS	98-5-11
CHKR	J. ROSE	01-03-06
DSGN	B. NOVAK	01-03-07
MFG	B. PORTER	01-03-09
PROJ	K. VONDERAHE	01-03-12
QA	M. CORNELIUS	01-03-19
MGR	S. SMITH	01-03-12
STRESS	N/A	
ILS	J. DOHERTY	01-03-19
REL	K. RODRIGUEZ	01-03-19

Simula
Safety Systems, Inc.
Tempe, Arizona

TITLE
ICD, FORWARD AIR BAG MODULE

CAGE CODE	SIZE	DWG NO	REV
54786	D	107805	-

SCALE 1/1 | WT - | SHT 1 OF 1

PROGRAM	NEXT ASSY	TOP ASSY
UH-60 CABS	-	-

PRO-E DATA FILE | CONTRACT NUMBER